DIGITAL DISPLAY

YOKINS
The Name That Spells Precision

DC VOLT & AMPERE METER

MODEL	Voltages & Current Ranges	Maximum Display	Supply
DD-DVA50-01-09	50V DC 1A DC	50.0 & 1.00	9V AC/DC
DD-DVA10.60-10-SP	10-60V DC 10A DC	60.0 & 9.99	Self Powered
DD-AVA20.100-10-SP	20-100V DC 10A DC	99.9 & 9.99	Self Powered
DD-AVA20.100-50-SP	20-100V DC 50A/75mV DC	99.9 & 50.0	Self Powered

DD-DVA50-01-09, DD-DVA10.60-10-SP, DD-AVA20.100-10-SP & DD-AVA20.100-50-SP

Accuracies to +/-1%,+/-2LSB
Reliable, long life, Micro controller measuring
Sample Speed: about 10 times/sec.
Over Range: Display 'H'
Mounting Size : 68*38mm
Dimension : 70*41mm
LED Size/Color : 3digit, 0.26', Red & Red

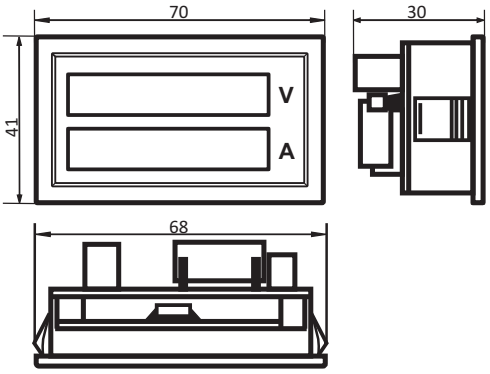

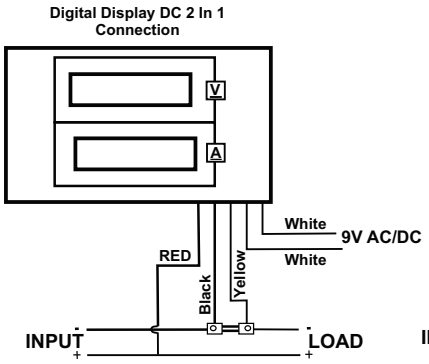

(DD-DVA50-01-09)

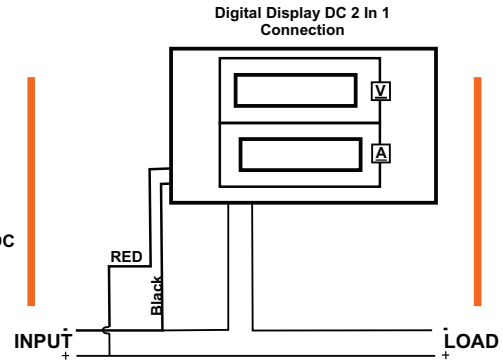

(DD-DVA10.60-10-SP & DD-DVA20.100-10-SP)

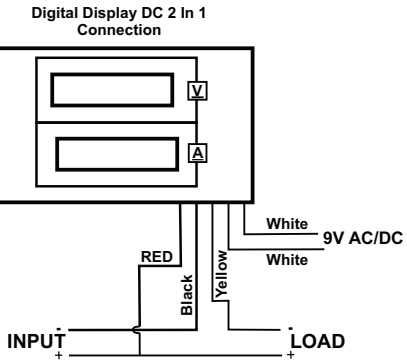

(DD-DVA20.100-50-SP)

E-Mail: sales@yokins.com| Tel: 011-40159888
www.yokins.com